HUMY 3000/3019/300

Continuous inline moisture measuring system for bulk materials

Application

The moisture in solids is an important parameter which strongly influences the quality of the product and can increase the economic efficiency of a production fundamentally. HUMY 3019 is in many processes, successfully in use among others at sugar, tobacco, grain, malt, flour, coal, sand, wood shavings, dried food, fertilizer, powder, pigments, plastic granules. As installation places conveyor belts, screw conveyors, silos, funnels are particularly suitable. The In-Line moisture measurement is also possible in batch processes.

At the measuring the relative permittivity and the high-frequency recession of the solid is measured in the high-frequency range. The measurement procedure makes a short and simple calibration as well as a high precision of up to 0.1% possible.

The measuring probe transmits the data digitally. This makes the measurement assignment disturbance insensitive and allows a distance of the sensor to the end judging unity up to 1000 m. The system supervising itself has an integrated data logger besides an automatic compensation of temperature and ageing drift, digital and alarm exits. The device is working by two analog output for the measured values and can be used automatically by the two digital inputs or the RS485-interface. The calibration will be done be the included software. For product or process changes different product parameters can be stored.

Main Benefits

- No samples fort he laboratory necessary
- Saving of energy costs
- Improvement on the product quality
- Very short amortization time
- High selective sensitiveness
- High measuring speed
- Precision better than 0.1% (under consideration of the product)
- Easy and economical installation
- Fast and simple calibration
- Optional ATEX-Version for Zone 20 und Zone 0

Examples for Installations

Installation im Silo

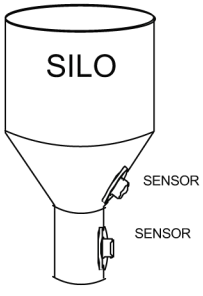

Installation der Fangarmatur Typ PSA

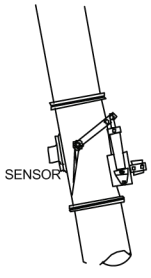

Assembly at the conveyor belt

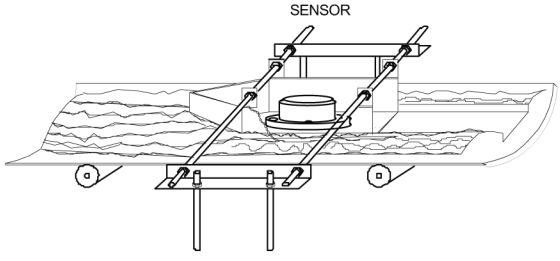

Montage in einer Förderschnecke / assembly at the screw conveyor

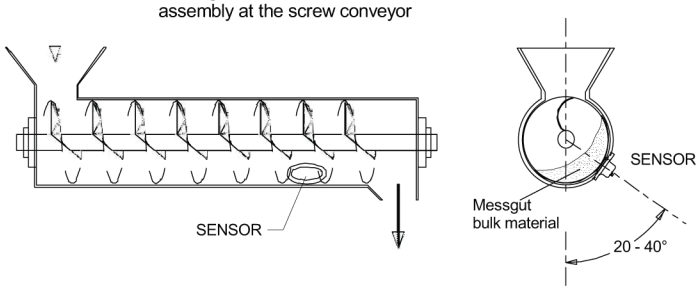

Application examples of successfully measured products

Chemicals and pharmaceutical
Fertilizer, plastics, phosphate, granules, absorber materials, melamine,
powders, tablets, pasta, foils, salt, potash washing-powder, styrofoam, synthetic material, PVC, acryl pigments

Food- and animal food industry
Grain, rape, sunflower seeds, sugar beets, potato products, flour, starch, milk powder, yeast, bean oil production, casein, gluten, gelatine, malt, hops soya, corn, lenses rice, pasta, beans confectionery, cereals,
food means, fish meal, dried food

Steel industry and power plants:
Ash, Aluminium oxide, iron, cole, coal, coal dust, coke, hydraded lime, sand, quartz, bricks (raw material), ceramic (raw material), gypsum

Wood and paper industry:
Cellulose, saw dust, wood chips, wood pellets
Construction material industry:
Cement, iron-II-sulfat, sand, quartz, gypsum, hydraded lime, limestone powder, bentonite, bricks (raw material), ceramic (raw material)

Other:
Tobacco, nuts, coffee and cacao beans, biscuits, cotton, leather, spices, blossoms

Application

Sand

Animal feed

Mounting in discharge screw (wood-fired power plant)

Grain

Cereals

Coal

Humy 3000 Technical Data Measuring Unit

Construction E

Construction T

Construction S

Construction F	Field-/wall-mounting housing, B 265 x H 240 x T 250, weight approx. 6.500 g, with sight-door IP65
Construction T	Desk-housing B 236 x H 132 x T 330mm, weight approx. 4.500g, Option panel housing
Construction E	19“-plugin 3HE / 42 TE, weight approx. 2.000 g
Construction S	Panel housing with sight door B270 x H183 x T223, IP 58
Indication	1/4 VGA-LC-Display 100 x 77 mm, 320 x 240 colour-pixel. For analogue and digital measurement representation
Display	Date, time, kind of product, temperature, value of residual, moisture or value of dehydrated substance, Min- and Max-alarm values, analog bar graph indication, dragging pointer width of deviation of measuring value with intensified indication of width of deviation of measuring value, digital indication and description of Min-/Max-limit values and the softkeys
Digital resolution	20 Bit for 0-85,0% moisture and 15 - 100% dry substance
Measuring range moisture	Min. 0.02 – 0.10%, max. 0.02 – 90.00%, with 1-,2- or 3 digits behind the point
Measuring range temp.	Span min.: 0-5° C, Span max.: 0-120° C
Accuracy	Max. 0.1 % in accordance to material to be measured
Handling	Foil-keyboard with each 4 pcs. 10-Block + Function keys + Softkeys
Averaging time	0-999 sec.
Memory	User-memory for storage of parameters of 24 different products.
Data logger	Storage of historical values up to 10 years. Real time clock for measurement record keeping.
Relay output	Normally opened and normally closed contact for each Min- and Max-alarm relay Contact load: 30VDC or 62.5 VAC
Analog outpu	Measuring value of residual moisture or dehydrated substance 0/4-20 mA (load 750 Ω. measuring value of product temperature, 0/4-20 mA, max. load 750 Ω.
Analog input	mA- and PT 100- input
Digital output	2x galvanic isolated, 24 V open-drain(max. 50mA)
Digital input	2x galvanic isolated, active signals (8-36 V)
Interface	RS 232 with connection for RxD, TxD, OV and RS 485
Power supply	230 V AC / 115 V AC or 24 V AC/DC All supplies can be available simultaneously (230 V AC und 24 V AC/DC or 115 V AC und 24 V AC/DC).

Technical Data Moisture Sesor

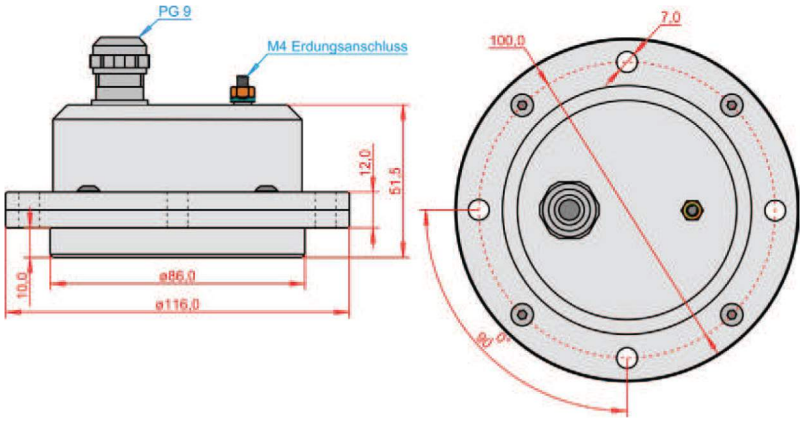

FMS 400 K	Measuring surface POM
FMS 400 C	Measuring surface ceramic
FMS 400 T	Measuring surface PTFE
Housing	Stainl. steel 1.4307
Weight	Approx. 1.050 g
Protection class	IP 67 according to EN 60529
Connection cable	Shielded 4-wires cable, 0.25 up to 0.5 mm²
Cable length	max. 1000 m with 0.75 mm²
Process-temp.	-10° ~ 90° C 140°C with cooling
Storage temp.	-10° ~ 80° C
Response time	Approx. 1 secoint
Power consumption	0.4 Watt
Signal	RS 485
Pressure resistance	Up to 6 bar

Humy 3019 Technical Data Measuring Unit

Construction F	Field-/wall-mounting housing, B 265 x H 240 x T 250, weight approx. 6.500 g, with sight-door IP65
Construction T	Desk-housing B 236 x H 132 x T 330mm, weight approx. 4.500g, Option panel housing
Construction E	19“-plugin 3HE / 42 TE, weight approx. 2.000 g
Construction S	Panel housing with sight door B270 x H183 x T223, IP 58
Perm. temp.	-10° till + 60°C
Storage temp.	-10° till + 70°C
Perm. humidity while operation	10% till 95% (without condensation)
Digital resolution	20 Bit for 0-85,0% moisture and 15 - 100% dry substance
Measuring range temp.	Span min.: 0-5° C, Span max.: 0-120° C
Handling	Via Software Hu-Config
Accuracy	max. 0,02 % depending on the measured material
Averaging time	0-999 sec.
Memory	User-memory for storage of parameters of 24 different products.
Data logger	Storage of historical values up to 10 years. Real time clock for measurement record keeping.
Relay output 2X	Normally opened and normally closed contact for each Min- and Max-alarm relay Contact load: 30VDC or 62.5 VAC
Analog outpu 2X	0/4-20 mA with a max. load of 750 Ω or 0/2-10 V with a min. load of 50 kΩ Measuring value of residual moisture /dehydrated substance and product temperature
Analog input	mA- and PT 100- input for additional compensation
Digital output 2X	Galvanic isolated, 24 V open-drain(max. 50mA)
Digital input 2X	Galvanic isolated, active signals (8-36 V)
Interface	RS 232 (front socket connection to PC) RS 485 (half-duplex)
Power supply	230 V AC / 115 V AC or 24 V AC/DC
Power consumption	Max. 6W

Humy 300 Technical Data Evaluation Unit

Housing	DIN-Rail Mounting
Material	PBT
Dimensions	22.5 mm x 114.5 mm x 99.0 mm (without clamps)
Protection class	IP20
Accuracy	Better than 0.1% (depending on product)
Weight	250 g
Perm. temp.	-10° ~ 60°C
Storage temp.	-10° ~ 60°C
Perm. humidity while operation	10% ~ 95% (without condensation)
Digital resolution	20 Bit for 0 - 85% moisture and 15 - 100% dry substance
Measuring range moisture	Min. 0,000 - 0,100%, max. 0,0 - 90%, with 1-,2- or 3 digits behind the point
Handling	Via Software Hu-Config
Averaging	0-999 sec.
Memory	User-memory for storage of parameters of 24 different products.
Relay output	Nominally opened and nominally closed contact for max-alarm relay Contact load: 30VDC or 62,5 VAC
Analog output	Measuring value of residual moisture or dehydrated substance 0/4-20 mA, load 500 Ω.
Digital input	2x galvanic isolated, active signals (8-36 V)
Interface	USB-Interface for Hu-Config; RS 232 with connection for RxD, TxD, OV; RS 485
Software	Hu-Config (included)
Power supply	24 V AC/DC